WALBRO WT 255

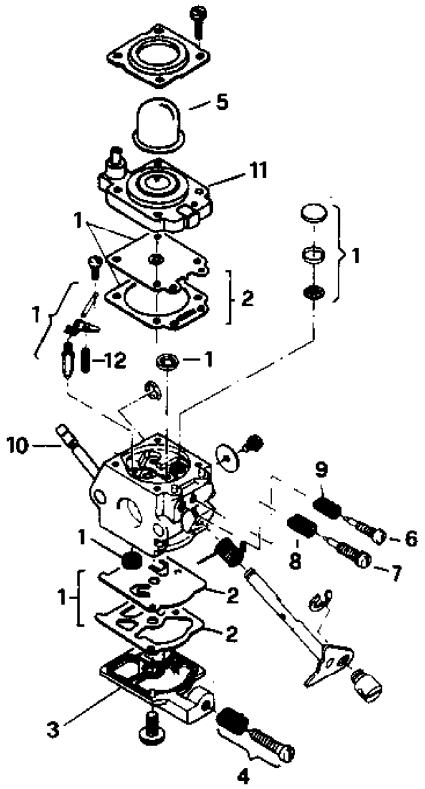

test

ZAMA C1Q M31

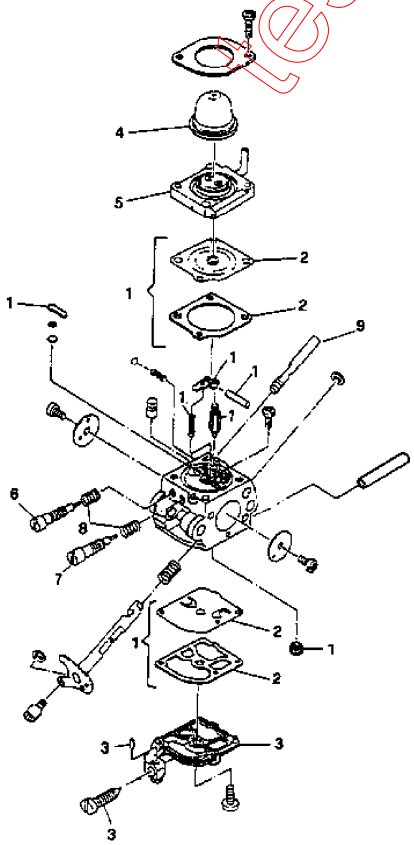

Section: SD 3100-SD 4100 BRUSH CUTTER CARBURETTOR

Pos.	Quantity WAL-BRO	Quantity ZAMA	Spare part No	Description	Kit	Notes	New
0	1		M240048	Carburettor assy		Walbro WT255	
1	1		M229198	.Repair kit			
2	1		M229191	..Gasket set			
3	1		M237480	.Pump cover			
4	1		M237481	.Idle screw			
5	1		M225834	.Primer			
6	1		M246540	.Needle-high speed			
7	1		M246541	.Needle-idle			
8	1		M229927	.Needle spring			
9	1		M229601	.Needle spring			
10	1		M225962	.Choke shaft			
11	1		M246949	.Primer support			
12	1		M246950	.Spring			
A00		1	M240013	Carburettor assy		Zama C1Q M31	
A01		1	M226226	.Repair kit			
A02		1	M226227	..Gasket set			
A03		1	M246945	.Pump cover			
A04		1	M246946	.Primer			
A05		1	M246947	.Primer support			
A06		1	M226228	.Needle-high			
A07		1	M226229	.Needle-idle			
A08		2	M226230	.Spring			
A09		1	M246948	.Choke lever			

test