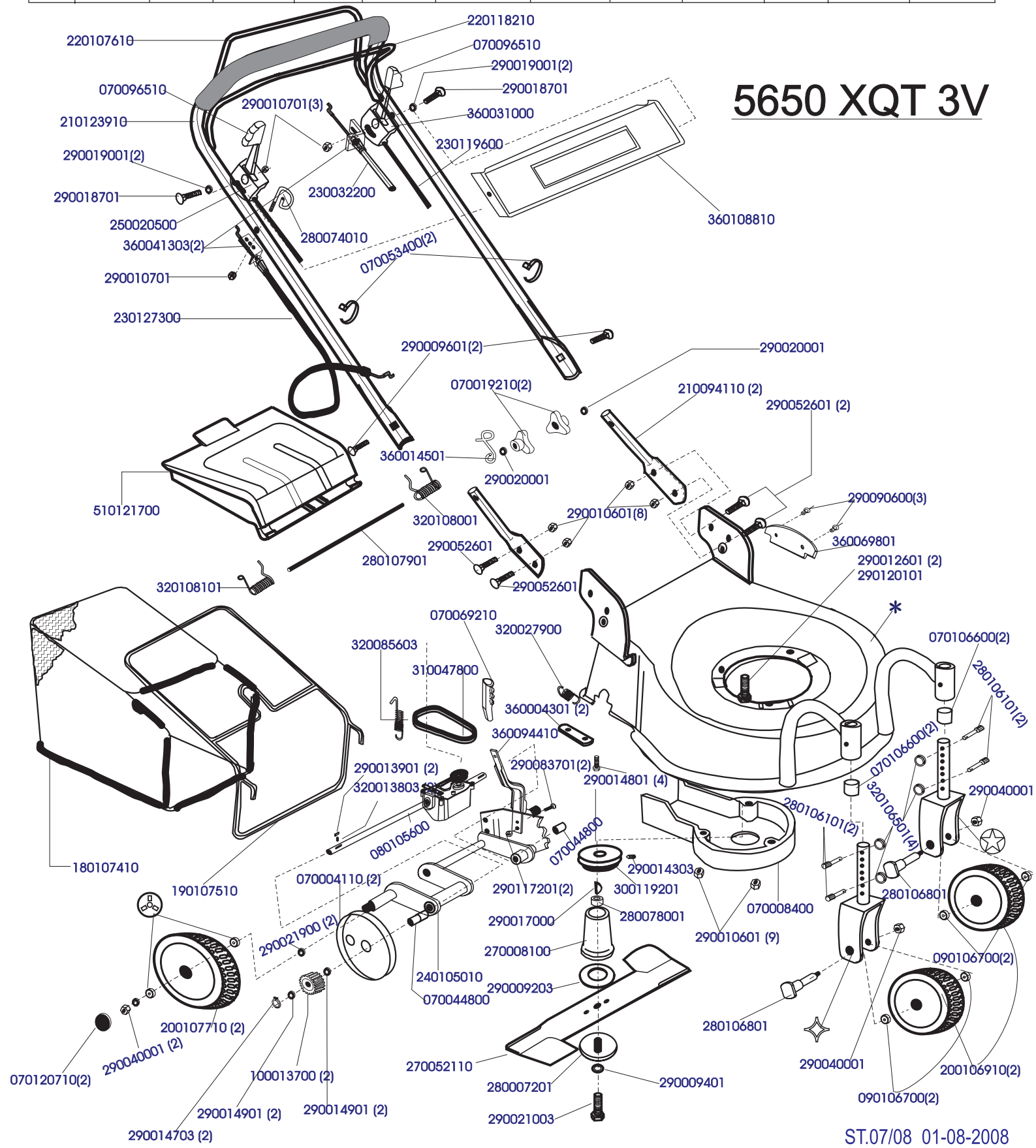COD.	MOD.	*										
S04604	AGT 5260	110107010	090106700(4)	360118410	360106410							
S04606	PRO 355	110107010	090106700(4)	360118410	360106410							
S04612	5650 XIT	110107018	090106700(4)	360118410	360106410