COD.	MOD.	*	**	✧	☆	△	⊛
S30150	560000 LKT	120179831	200244000(2)	200197900(2)	200090015(2)	200177615(2)	090054700(4)
S30151	560000 LKT	120179814	200244000(2)	200197900(2)	200090015(2)	200177615(2)	090054700(4)
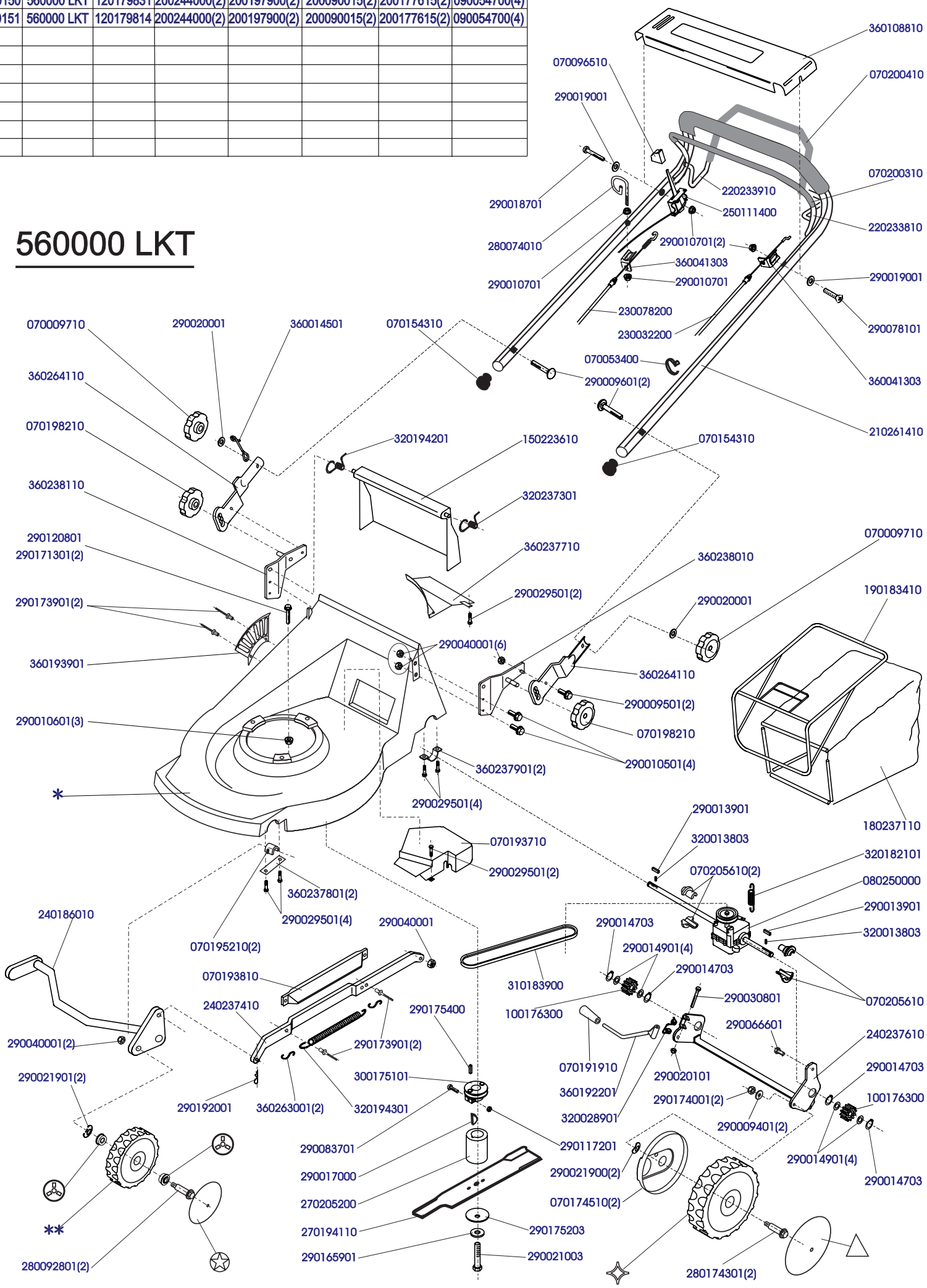
560000 LKT