COD.	MOD.	*	**	✧	✪	△						
S04551	5450 GLT	120094923	200092200(2)	200114400(2)	200114510(2)	200070910(2)						
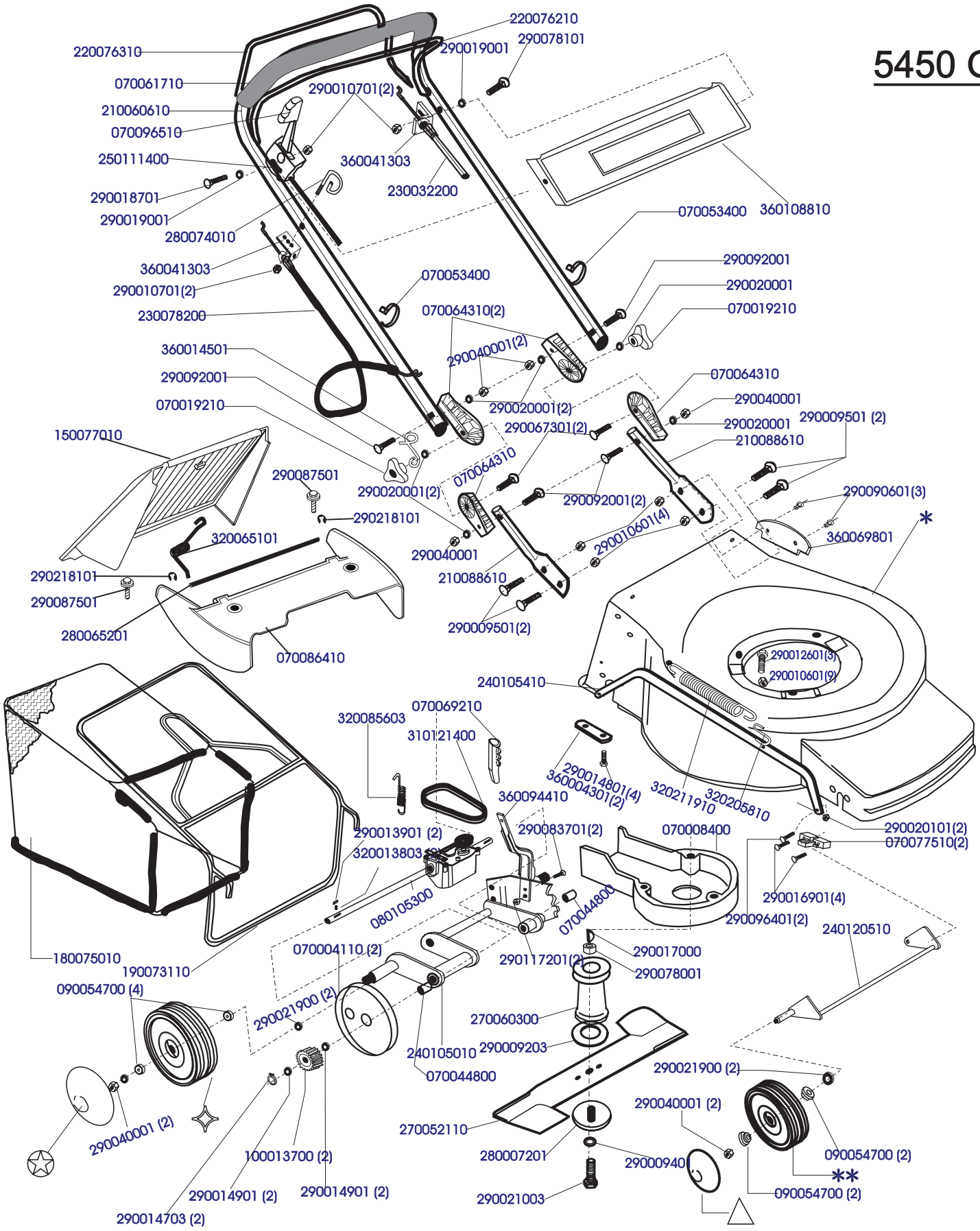
5450 GLT