COD.	MOD.	*	**	✧	✪	△	⊛					
S05055	5420 NRT	110271530	200092200(2)	200013600(2)	200244715(2)	200244615(2)	090054700(8)					
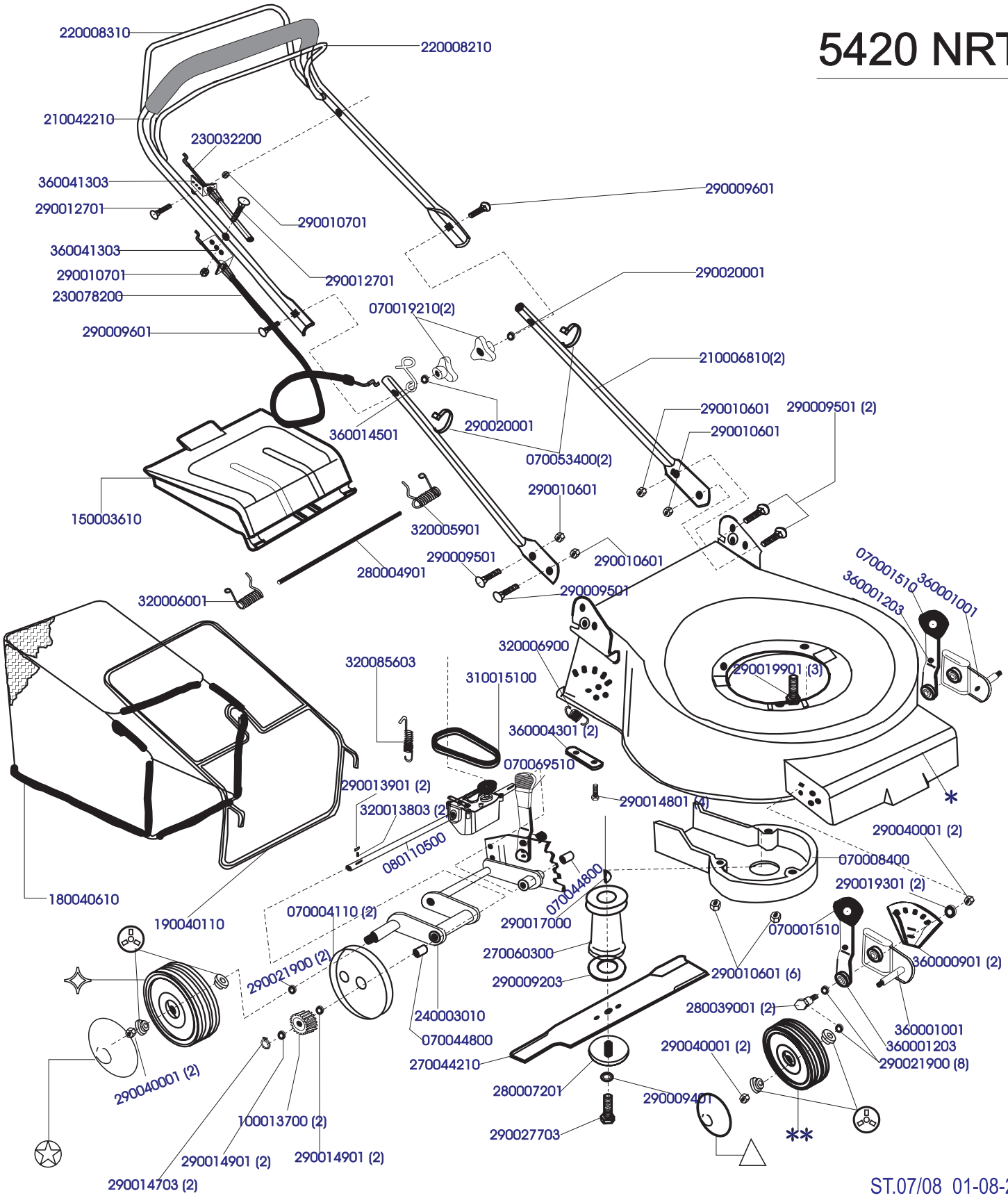
5420 NRT