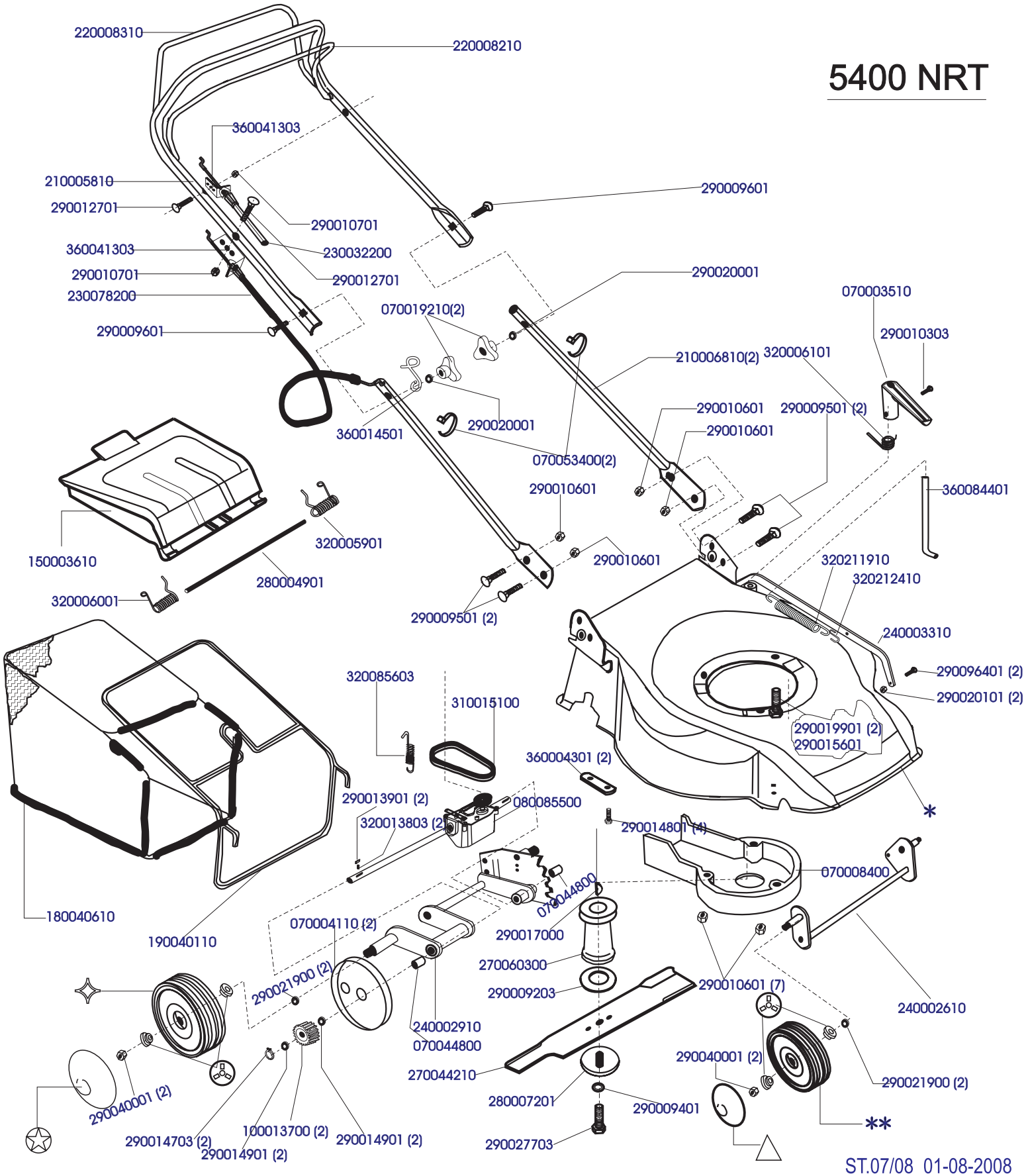COD.	MOD.	*	**	✧	△	☆	✇					
S05053	5400 NRT	110000714	200092200(2)	200013600(2)	200070915(2)	200090015(2)	090054700(8)