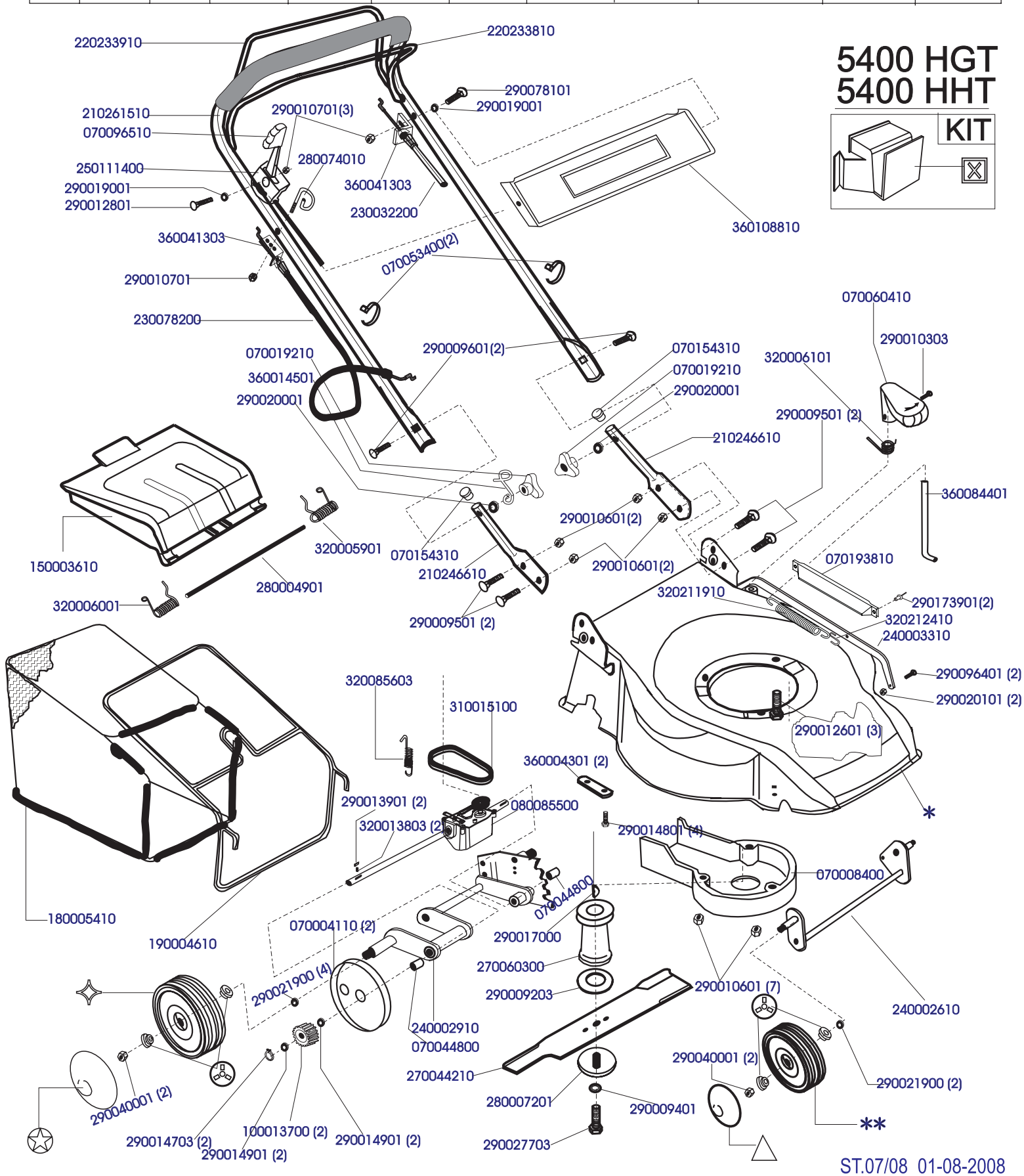| COD. | MOD. | * | ** | ✧ | △ | ☆ | ✿ | ☒ | | | |
|---|---|---|---|---|---|---|---|---|---|---|---|
| S04828 | 5400 HHT | 110000714 | 200092200(2) | 200013600(2) | 200070915(2) | 200090015(2) | 090054700(8) | ———— | | | |
| S04831 | 5400 HHT | 110000714 | 200092200(2) | 200013600(2) | 200070915(2) | 200090015(2) | 090054700(8) | ———— | | | |
| | | | | | | | | | | | |
| | | | | | | | | | | | |
| | | | | | | | | | | | |
| | | | | | | | | | | | |
| | | | | | | | | | | | |
| | | | | | | | | | | | |
| | | | | | | | | | | | |
| | | | | | | | | | | | |