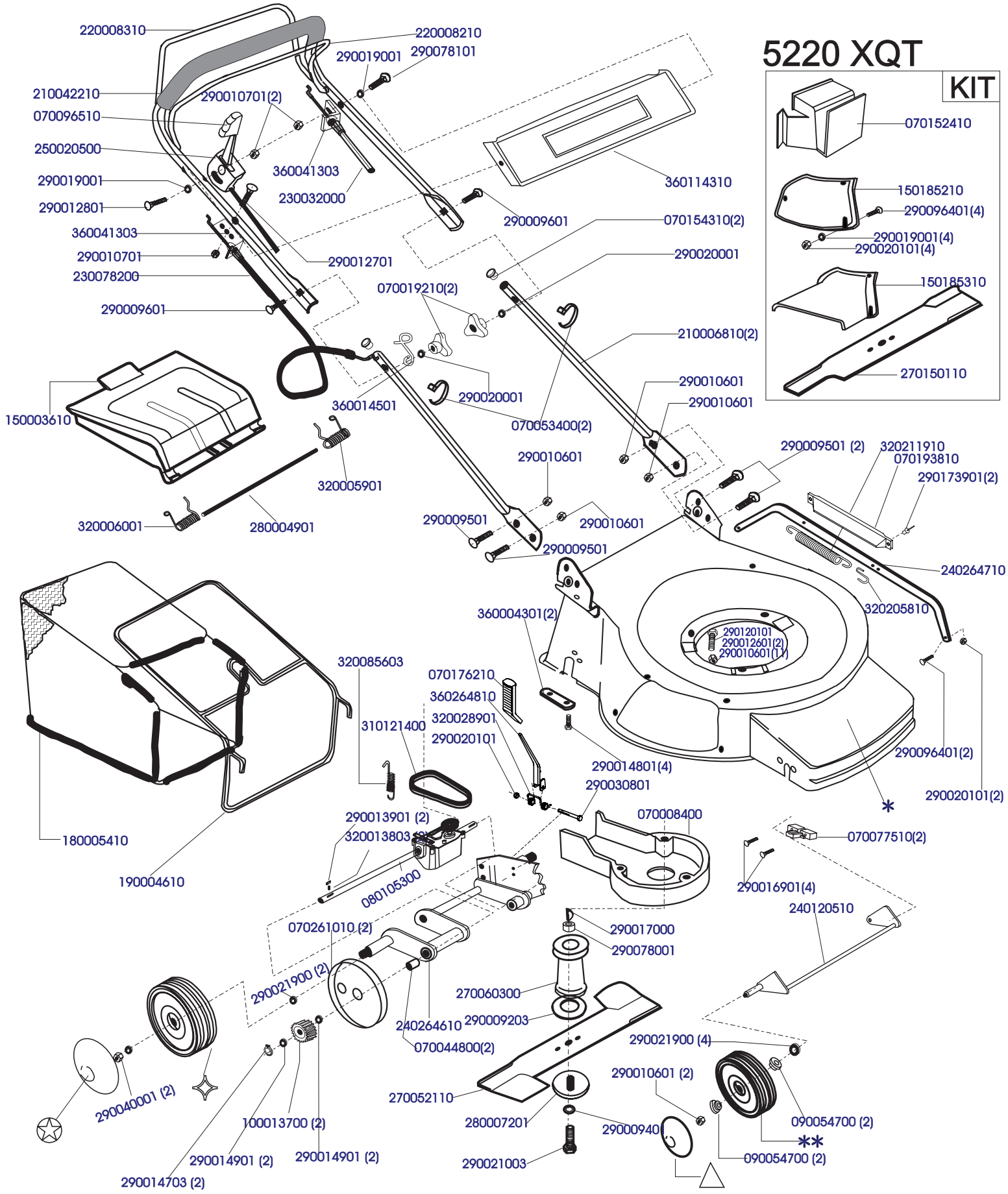COD.	MOD.	*	**	✧	✪	△						
S03162	5220 XQT	120264421	200244200(2)	200260300(2)	200260515(2)	200260615(2)