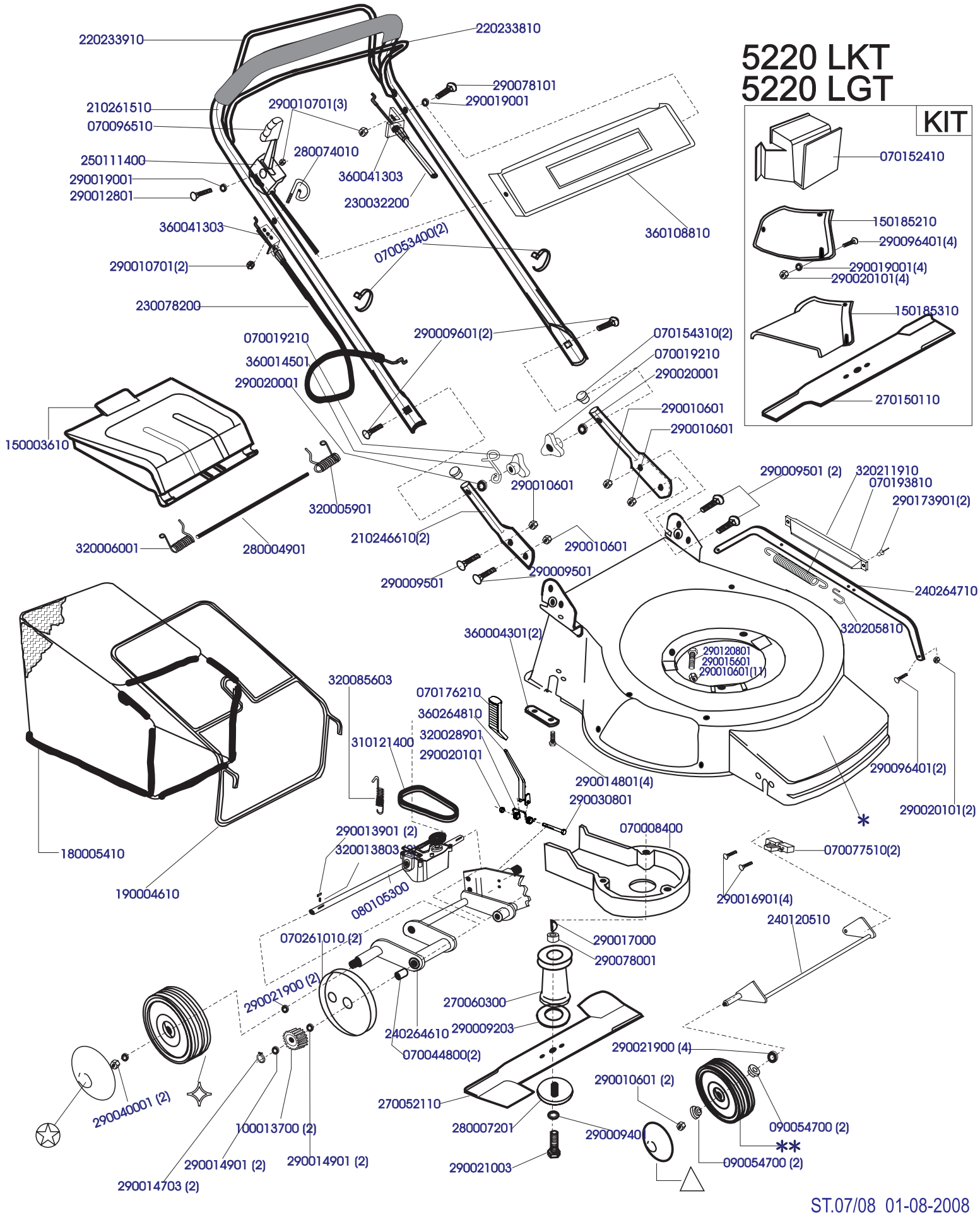COD.	MOD.	*	**	✧	✪	△						
S03961	5220 LKT	120264414	200244200(2)	200260300(2)	200260515(2)	200260615(2)						
S03967	5220 LKT	120264430	200244200(2)	200260300(2)	200260515(2)	200260615(2)