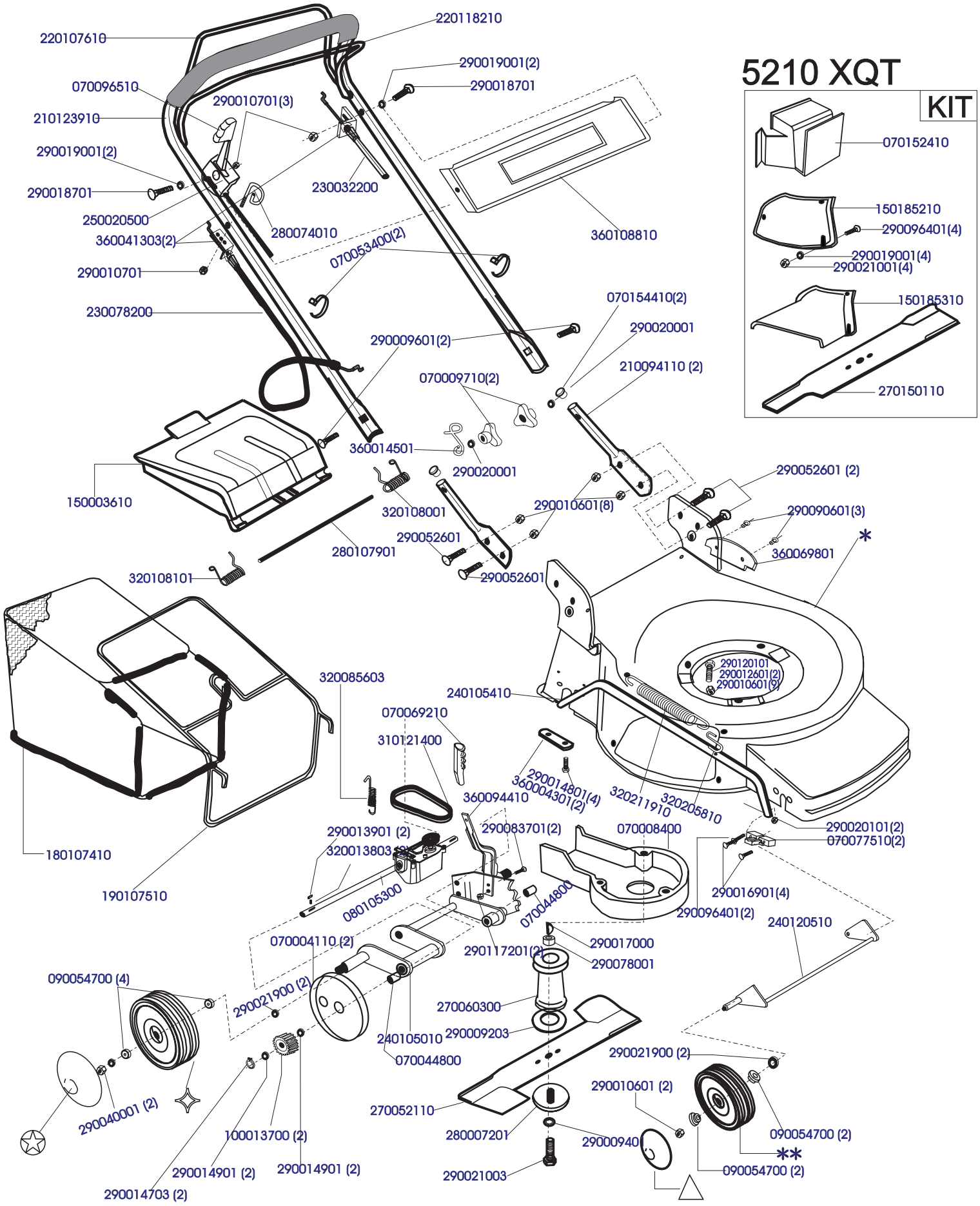COD.	MOD.	*	**	✧	✪	△						
S03151	5210 XQT	120236321	200092200(2)	200114400(2)	200114515(2)	200070915(2)