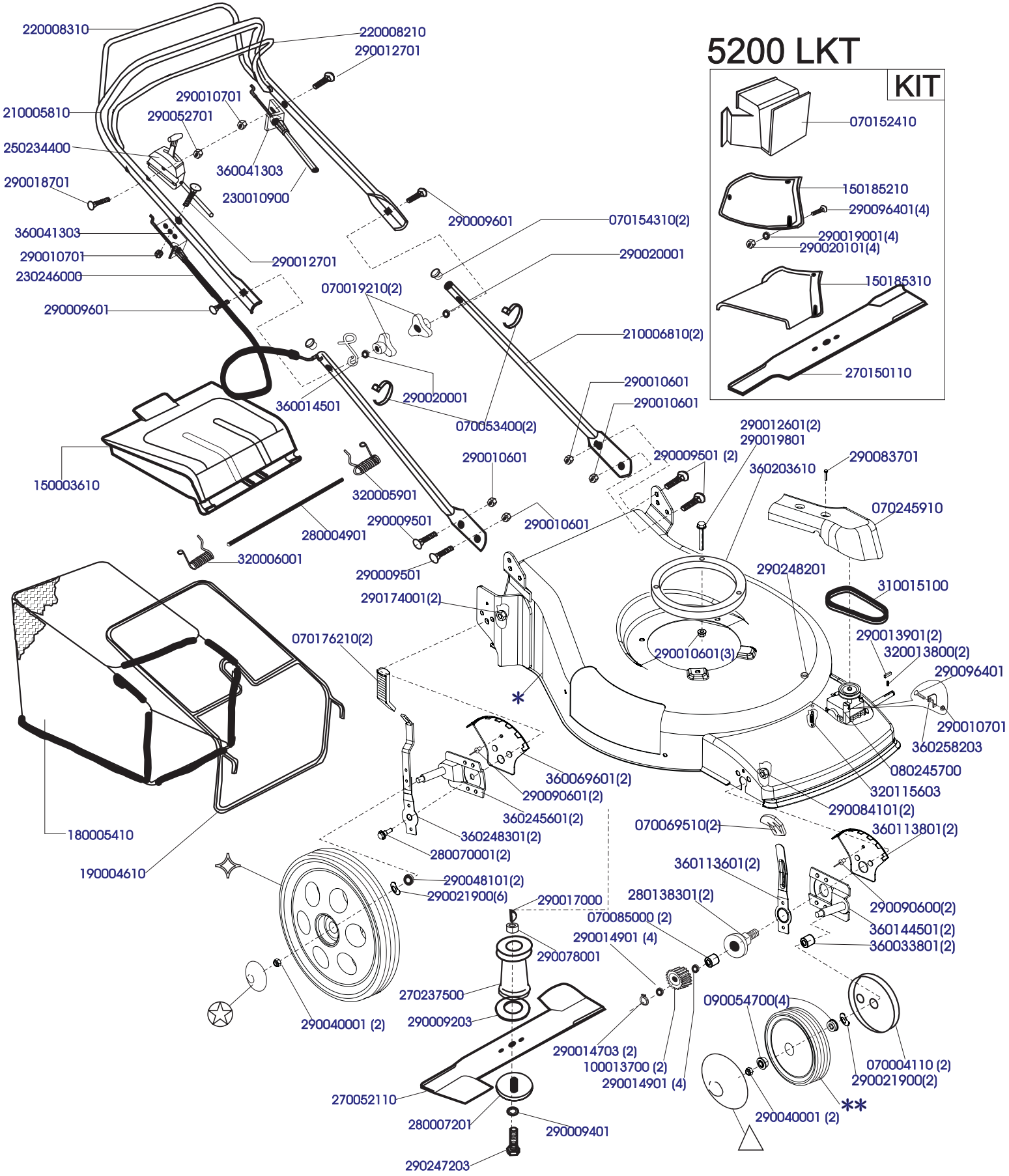COD.	MOD.	*	**	✧	✪	△						
S03951	5200 LKT	110245023	200262800(2)	200228000(2)	200258100(2)	200244725(2)						
S03954	5200 LGT	110245023	200262800(2)	200228000(2)	200258100(2)	200244725(2)						
S03956	5200 LKT	110245030	200262800(2)	200228000(2)	200258100(2)	200244725(2)						
S03957	5200 LKT	110245021	200262800(2)	200228000(2)	200258100(2)	200244725(2)						
S03958	5200 LKT	110245030	200262800(2)	200228000(2)	200258100(2)	200244725(2)						
S03959	HBL 51	110245014	200262800(2)	200228000(2)	200258100(2)	200244725(2)						
S03960	HBR 51	110245010	200262800(2)	200228000(2)	200258100(2)	200244725(2)						
S03962	5200 LKT	110245031	200262800(2)	200228000(2)	200258100(2)	200244725(2)						
S03963	5200 LKT	110245014	200262800(2)	200228000(2)	200258100(2)	200244725(2)