5110 GLT
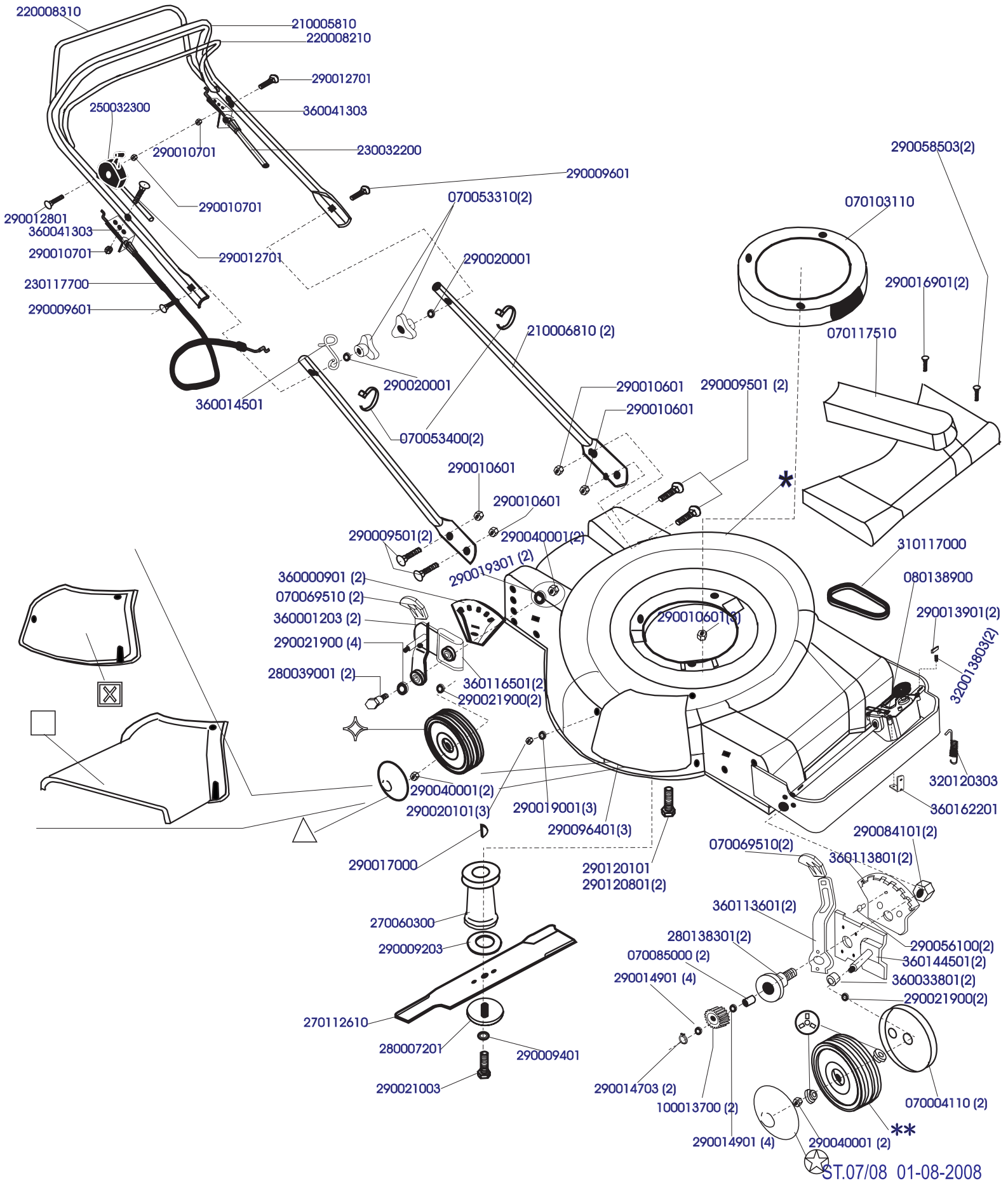
COD.	MOD.	*	□	☒	✧	✪	**	△	⊛	
S06401	5110 GLT	110116214	150091910	150091810	200101100(2)	200090015(2)	200013600(2)	200090015(2)	090054700(8)	
S06402	5110 GLT	110116221	150091910	150091810	200101200(2)	200090015(2)	200013600(2)	200090015(2)	090054700(4)