COD.	MOD.	*	**	✧	☆	△	⊛
S08202	480000 XST	110234616	200092100(2)	200114400(2)	200070915(2)	200114515(2)	090054700(4)
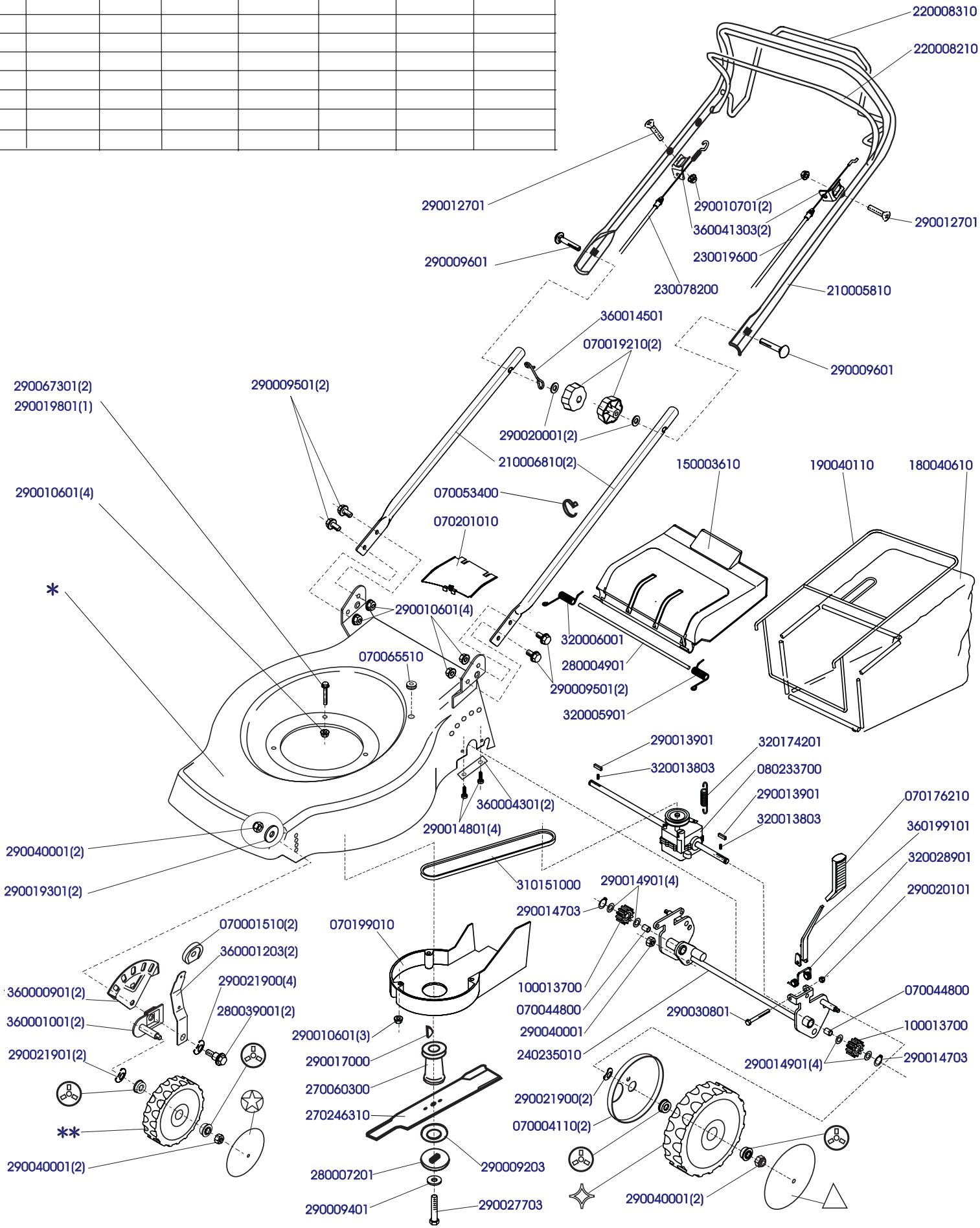
480000 XST