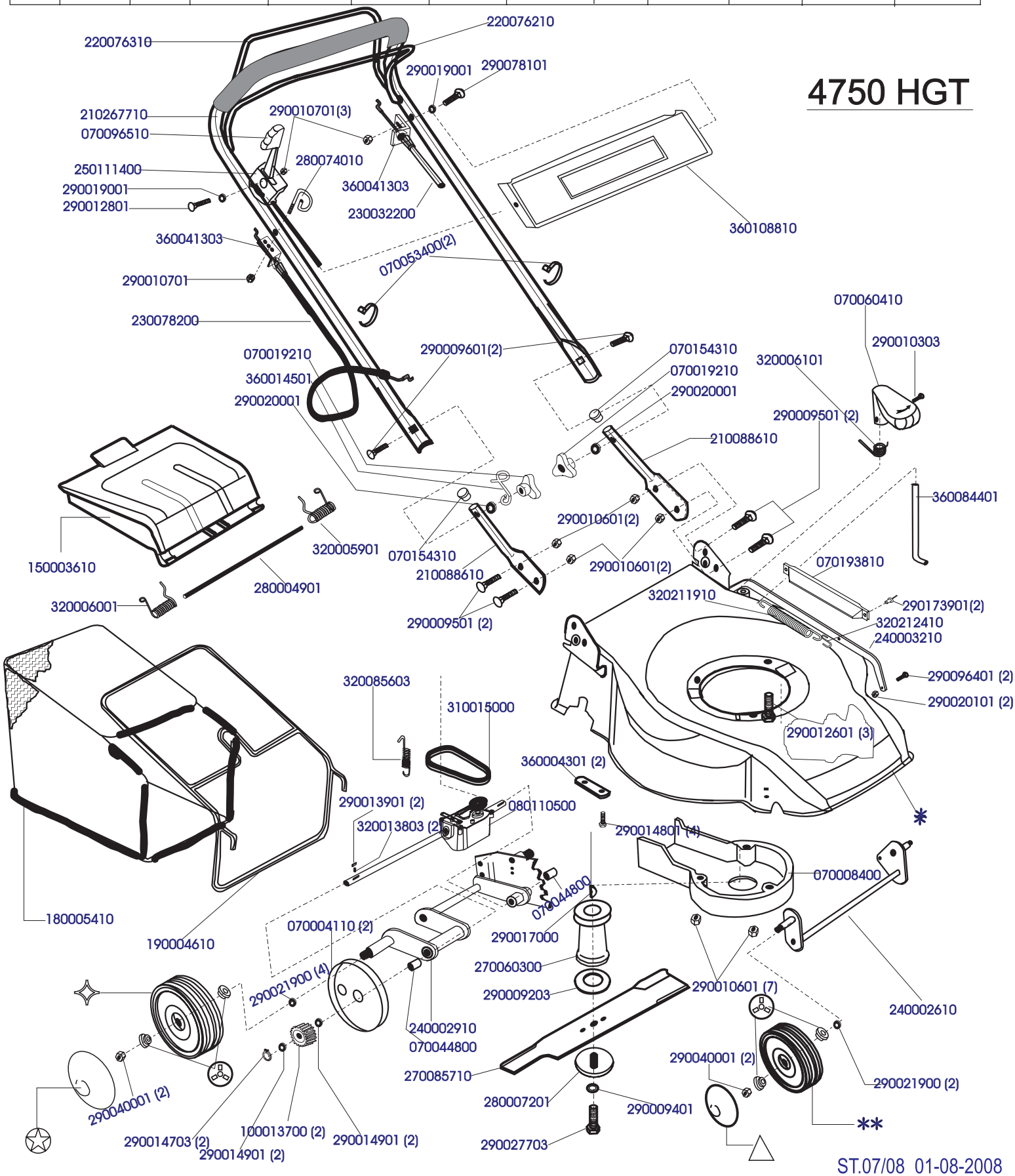COD.	MOD.	*	**	✧	△	☆	✇					
S04707	4750 HGT	110081222	200092200(2)	200013600(2)	200070915(2)	200090015(2)	090054700(8)					
S04724	4750 HGT	110081214	200092200(2)	200013600(2)	200070915(2)	200090015(2)	090054700(8)