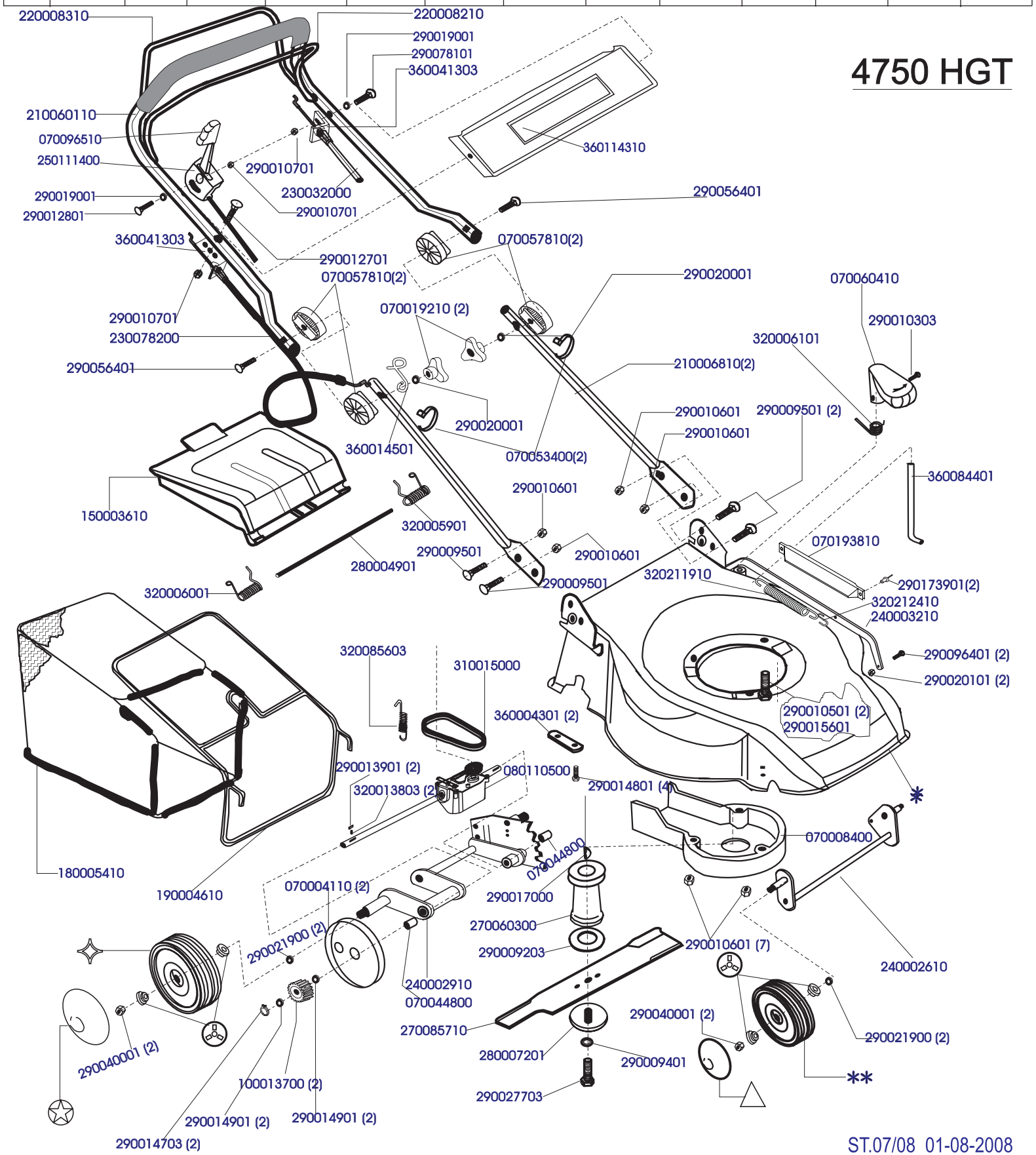COD.	MOD.	*	**	✧	✪	△	⊛						
S04701	4750 HGT	110081222	200092200(2)	200013600(2)	200090015(2)	200070915(2)	090054700(8)						
S04702	4750 HGT	110081222	200092200(2)	200013600(2)	200090015(2)	200070915(2)	090054700(8)