COD.	MOD.	*	**	✧	☆	△	✇	□				
S02864	4720 XSTE	110040418	200055000(2)	200013600(2)	200090010(2)	200059210(2)	090054700(8)	070120010				
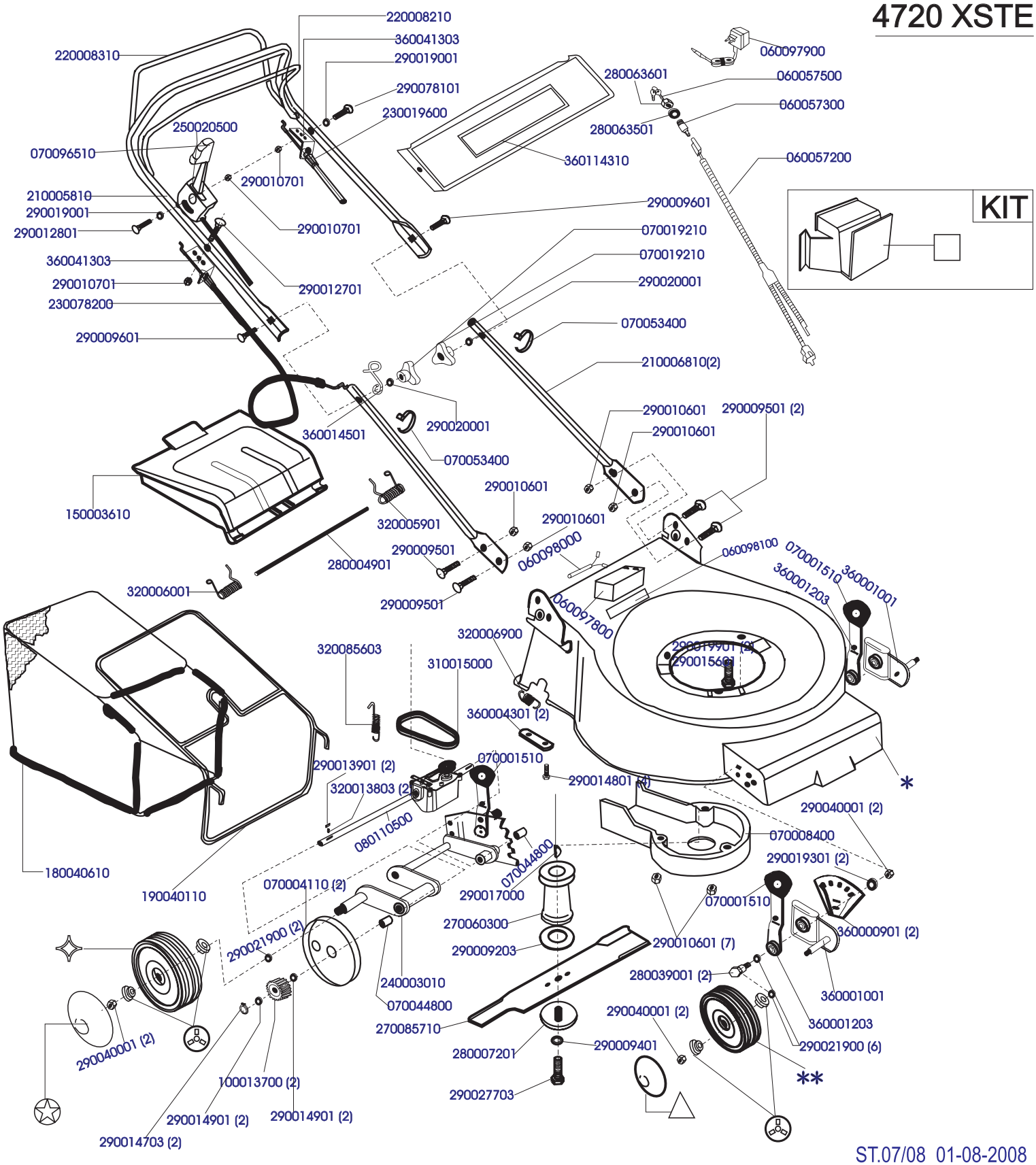
4720 XSTE