Electrolux

PARTS 2000	8P
	P0103001

MODEL Flymo VT350

ILLUSTRATED PARTS LIST
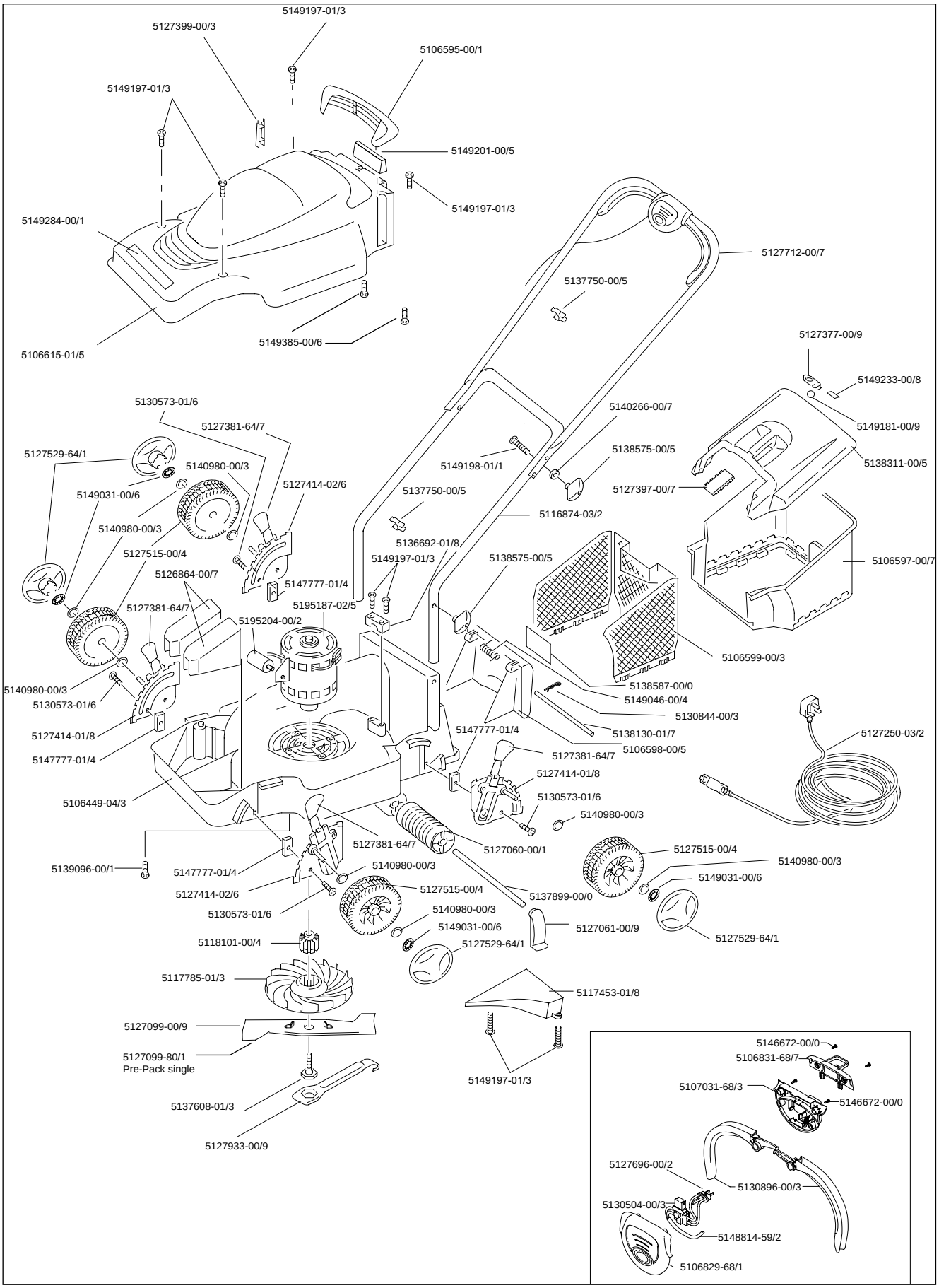
9643529-01
UK